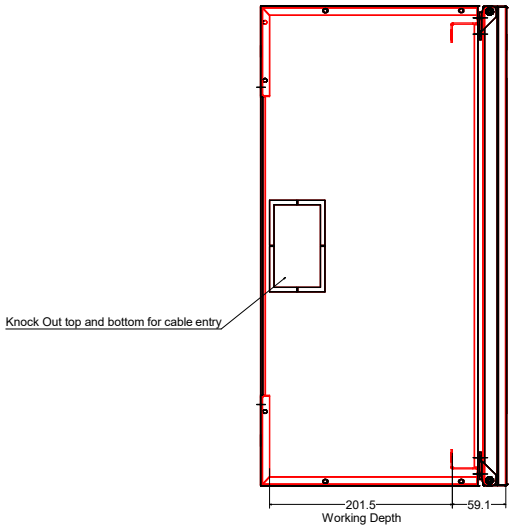

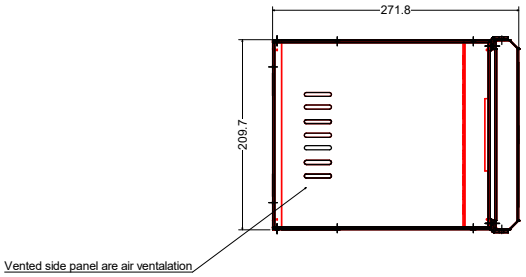

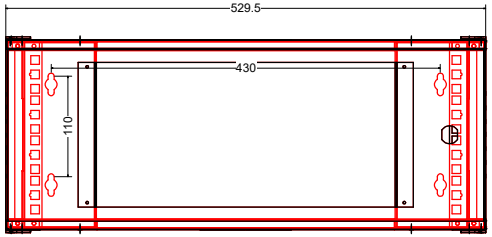

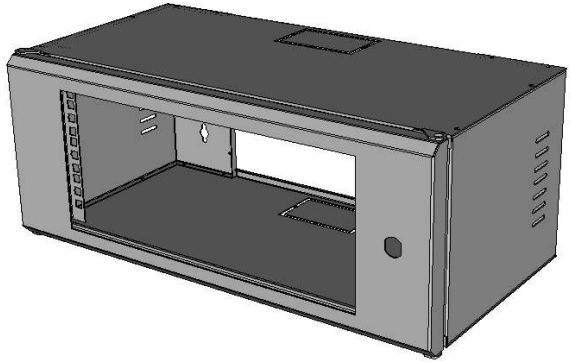

Description. 4U 19" Data Rack / Patching - Network Cabinet - 275mm Deep			*Material.* 1.2 Mild Steel	Designed by Shane Date 15/09/2020	*Customer* Ad-Tek
Drawing No. AD4UPC	*Rev.* 2	Scale 1 : 1	*Finish* Ral 9005	*Tolerance* + / - 0.2mm	

Units 31-37, Broton Drive, Broton Industrial Estate, Halstead. Essex. CO9 1HB
Telephone : 01787 474470 e-mail : sales@ad-tekproducts.co.uk

All rights strictly reserved reproduction or issue to third parties in any form whatsoever is NOT permitted without written consent from Ad-Tek Products